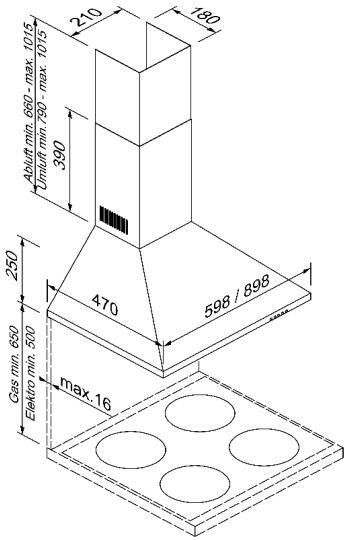

EAN: 4251003107203

Wall Flue 90 cm
5DW69751
Stainless Steal

Output, consumption

Energie-Effizienzklasse: D
- Average energy consumption: 68,1 kWh / year *
- Fan efficiency class: E
- Lighting efficiency class: A
- Grease filter efficiency class: C
- Total connected load:123W
- Voltage: 220 - 240V
- noise min./max. Normal level:: 63 dBA in Max
- fan power max. Normal Level:
  - with exhaust air operation max(m3/h): 400
  -with recirculation mode max.(m3/h): 245

Equipment / comfort
- Fan power 3-level controlled by pushbuttons
- Even, bright lighting with 2 x 5W LED lamps
- Illuminance: 100 lux
- Color temperature: 3000 K
- Metal grease filter, dishwasher safe
- Follow-up function:n0
- Filter change reminder: no

Technical data and dimensions (HxBxT)
- Exhaust air: 64,0-101,5x89,8x47,0
- Recigulation air 64,0-101,5x89,8x47,0
- Appliance dimensions (packed): 580 x 970 x 345 mm
- Net weight (kg): 11,2
- Gross weight (kg): 13,6

Accessories:

Optional accessories:

Aktivkohlefilter	5Z 9100X1	EG18881
Schachtverlaengerung 770 mm	5Z9122X1	EG18221

Available color options:

Ausstattungsmerkmale:
- Device type: chimney hood
- Color of the fireplace: stainless steel
- Type: wall
- Approval certificates: CE/UKCA
- Length of connection cable (cm):min 150
- Control: push buttons
- Regulation of power levels: 3
- Diameter of exhaust air outlet (mm): 150
- Material of grease filter: Aluminum
- Type of air flow: upwards

Consumption and connection values:
- Connected load (W):123
- Voltage (V): 220-240
- Frequency (Hz): 50
- Connector type: EU
- Type of installation: wall
- • Housing material: housing made of stainless steel
- Approval certificates: CE/UCKA
- Required distance between tray / cooker: Electric: 650mm, Gas: 650mm
- Position of the blower: motor in the housing