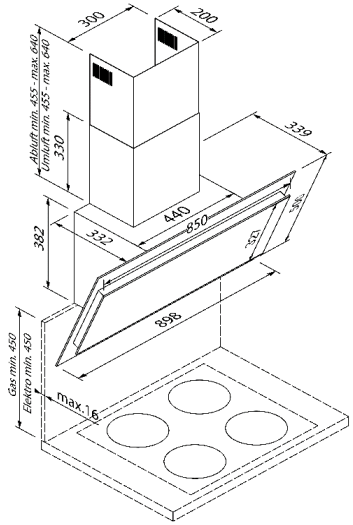

EAN Nr: 4251003106909

Headless hood 90 cm
5DL69653
Black glass

Output, consumption

Energie-Effizienzklasse: A+
- Average energy consumption: 44,0 kWh / year *
- Fan efficiency class: A
- Lighting efficiency class: A
- Grease filter efficiency class: C
- Total connected load: 272W
- Voltage: 220 - 240V
- noise min./max. Normal level:: 64 dBA in Max
- fan power max. Normal Level:
  - with exhaust air operation max(m3/h): 630
  - with recirculation mode max.(m3/h): 385
- fan power max. Normal Level:
  - with exhaust air operation intensiv(m3/h): 790
  - with recirculation mode intensiv (m3/h): 430

Equipment / comfort
- Fan power 3-level +Intensiv level
- Touch Control
- Even, bright lighting with 2 x 2,2 W LED lamps
- Illuminance: 170 lux
- Color temperature: 4000 K
- Metal grease filter, dishwasher safe
- Follow-up function:no
- Filter change reminder: yes

Technical data and dimensions (HxBxT)
- Exhaust air: 873-899x900x340 mm
  Recigulation air 960-1022x900x340 mm
- Appliance dimensions (packed): 637 x 1020 x 650 mm
- Net weight (kg): 15,9
- Gross weight (kg): 22,4

Accessories:

Optional accessories:

Charcoal filter Regenerative	5Z9100X1	EG18881
Charcoal filter	5Z9100X2	EG18884
Shaft lengthening VA 500 mm	5Z9117X1	EG18882
Shaft lengthening BK 500 mm	5Z9117X3	EG18887
Shaft lengthening VA 900 mm	5Z9118X1	EG18883
Shaft lengthening BK 900 mm	5Z9117X4	EG18888

Available color options:

Ausstattungsmerkmale:
- Device type: Headless hood
- Color of the fireplace: stainless steel
- Type: wall
- Approval certificates: CE/UKCA
- Length of connection cable (cm):min 150
- Control: Touch control
- Regulation of power levels: 4
- Diameter of exhaust air outlet (mm): 150
- Material of grease filter: Aluminum
- Type of air flow: upwards

Consumption and connection values:
- Connected load (W):272
- Voltage (V): 220-240
- Frequency (Hz): 50
- Connector type: EU
- Type of installation: wall
- Housing material: housing made of pounded steel and glas
- Approval certificates: CE/UCKA
- Required distance between tray / cooker: Electric: 450mm, Gas: 450mm
- Position of the blower: motor in the housing